DRAIN-FEEDBACK BIAS

E-MOSFET DC BIASING

prepared by:

Gyro A. Madrona

Electronics Engineer

GRADING SYSTEM

FINAL GRADE

30%

PRELIM

30%

MIDTERM

40%

ENDTERM

TERM GRADE

50%

EXAM

50%

LABORATORY

PENALTY

0

ABSENT

3

45-min LATE

5 max

15-min LATE

TOPIC OUTLINE

E-MOSFET Construction

Regions of Operation

Transfer Characteristics

Feedback Bias Configuration

E-MOSFET CONSTRUCTION

CONSTRUCTION

N-Chanel

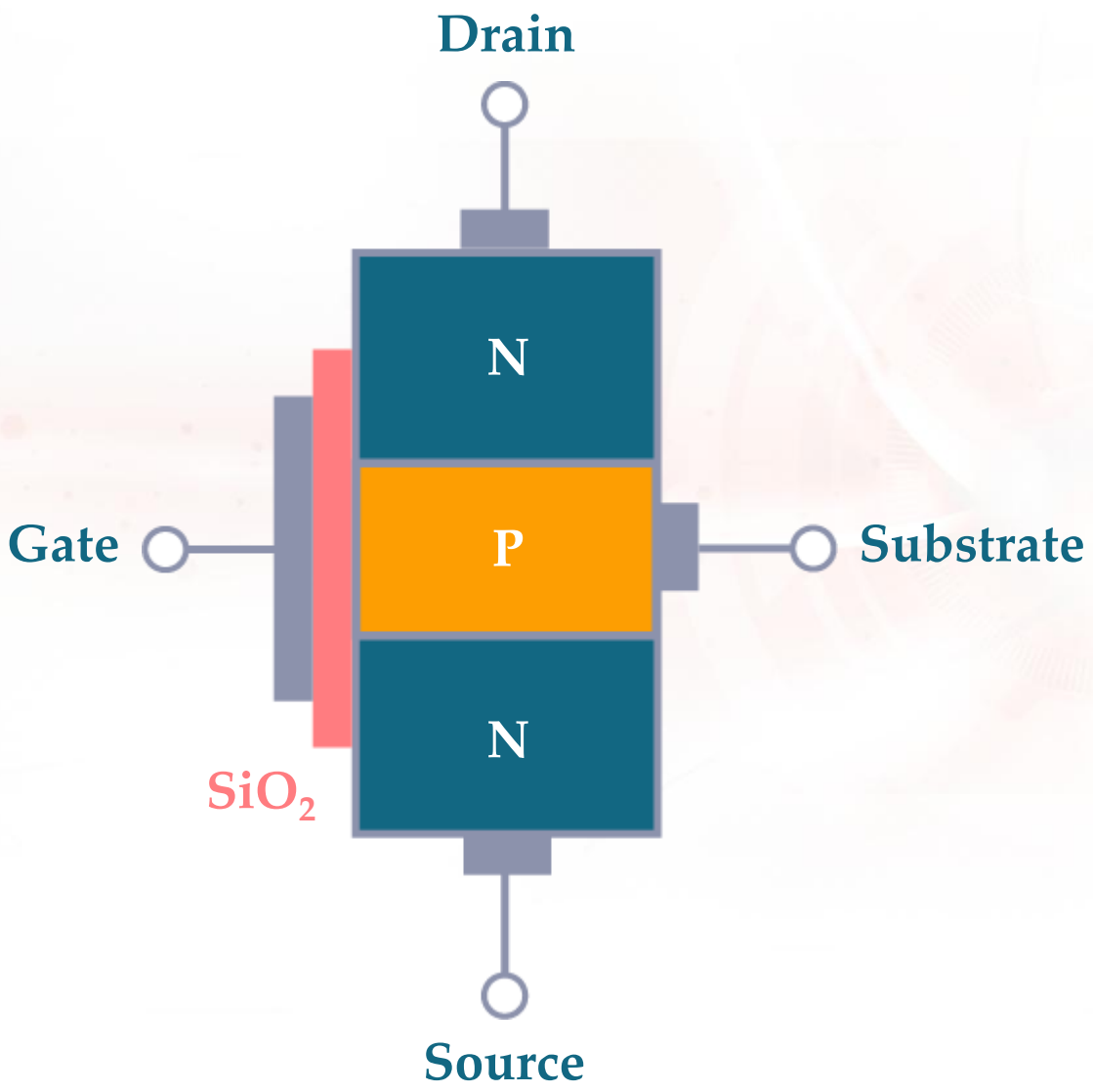

P-Channel

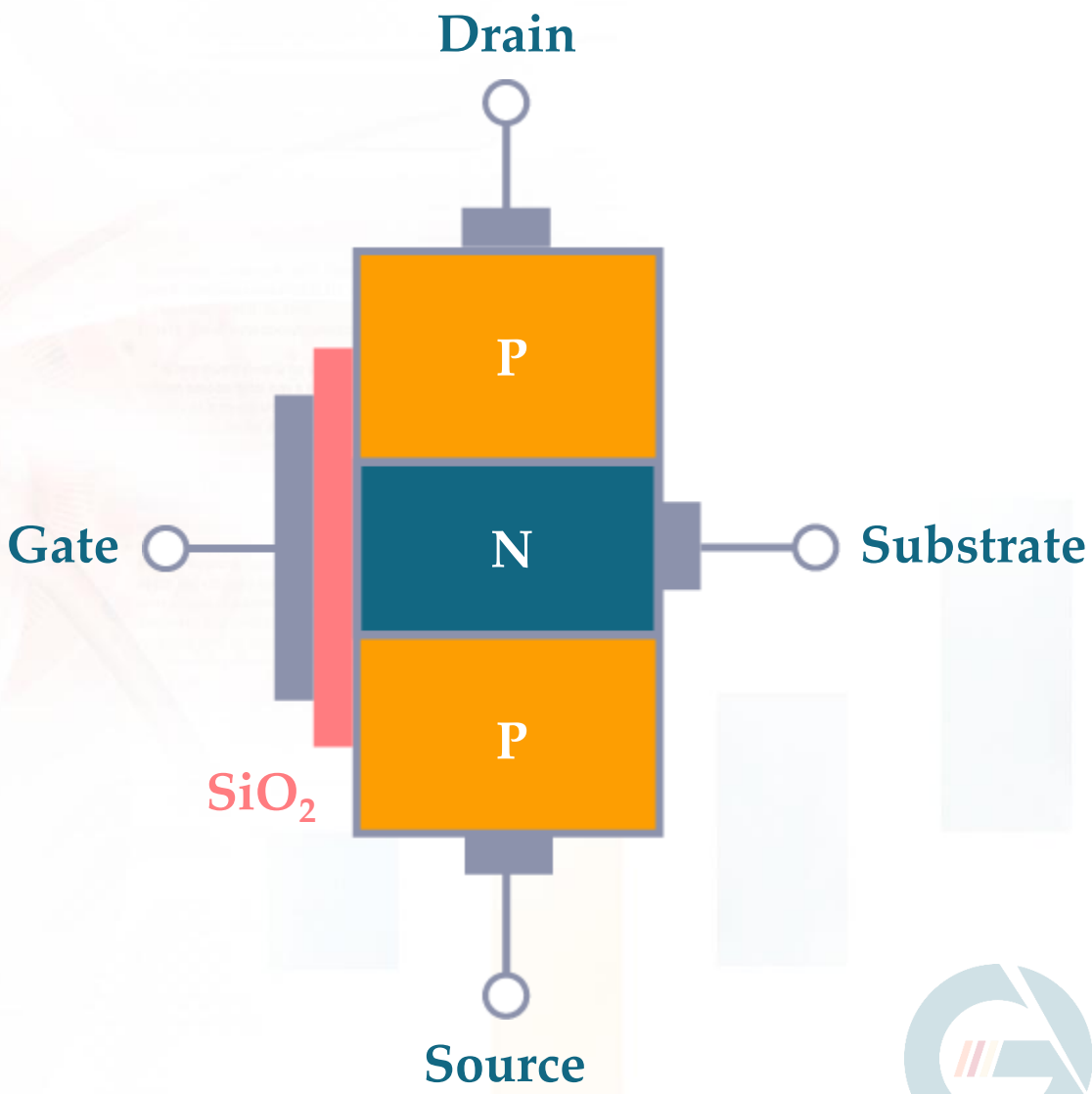

SCHEMATIC SYMBOL

N-Chanel

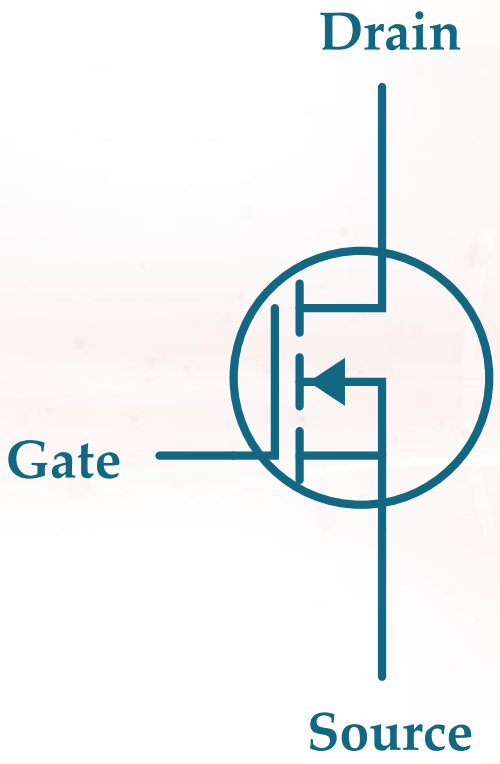

P-Channel

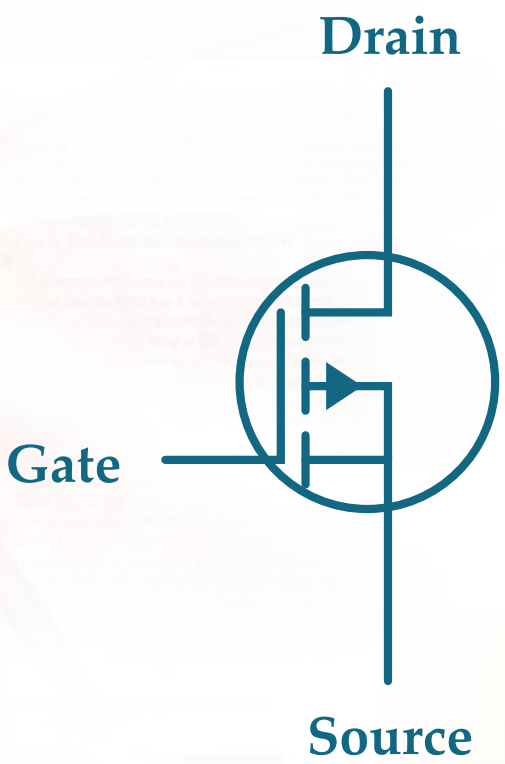

REGIONS OF OPERATION

THRESHOLD VOLTAGE

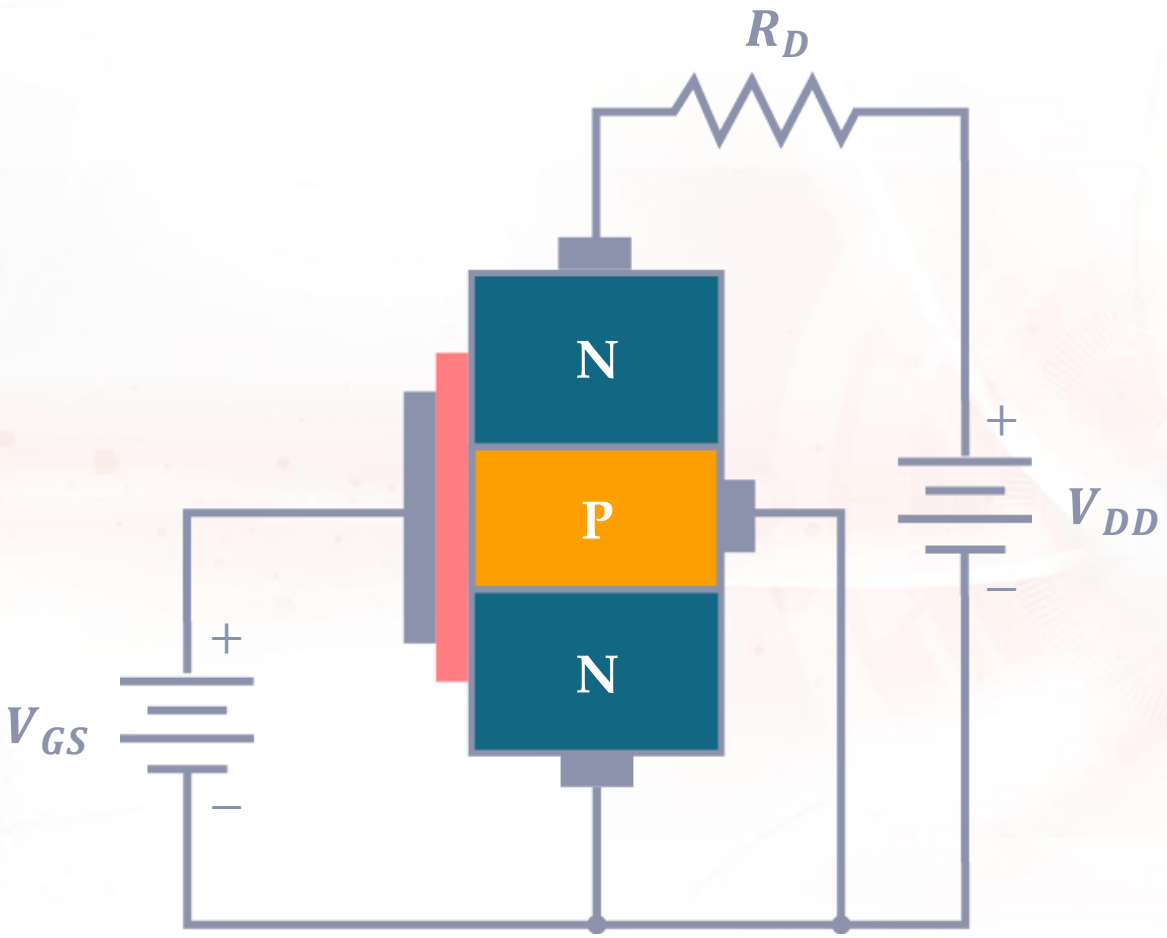

E-MOSFET is **normally off**

n-type inversion layer

a thin conducting layer near the silicon dioxide

The **minimum voltage** v_{GS} that creates the n-type layer is called the threshold voltage $\boldsymbol{v_{GS(th)}}$

1 to 3 V for small-signal devices

DRAIN CURVE

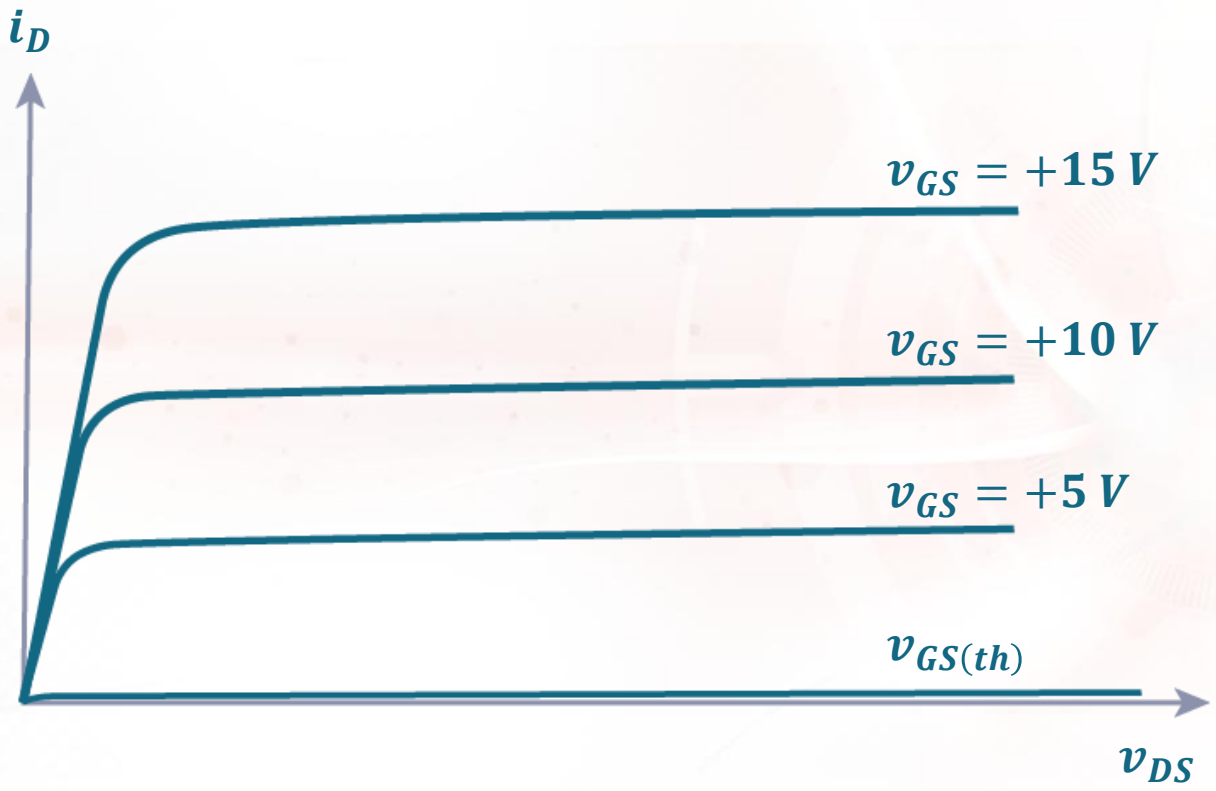

When v_{GS} is **less** than $\boldsymbol{v_{GS(th)}}$, the drain current is approximately **zero**

The almost vertical part is the ohmic region

The almost horizontal part is the active region

E-MOSFET is mainly use to operate in the **ohmic region** (switching device)

TRANSFER CHARACTERISTICS

DRAIN CURRENT

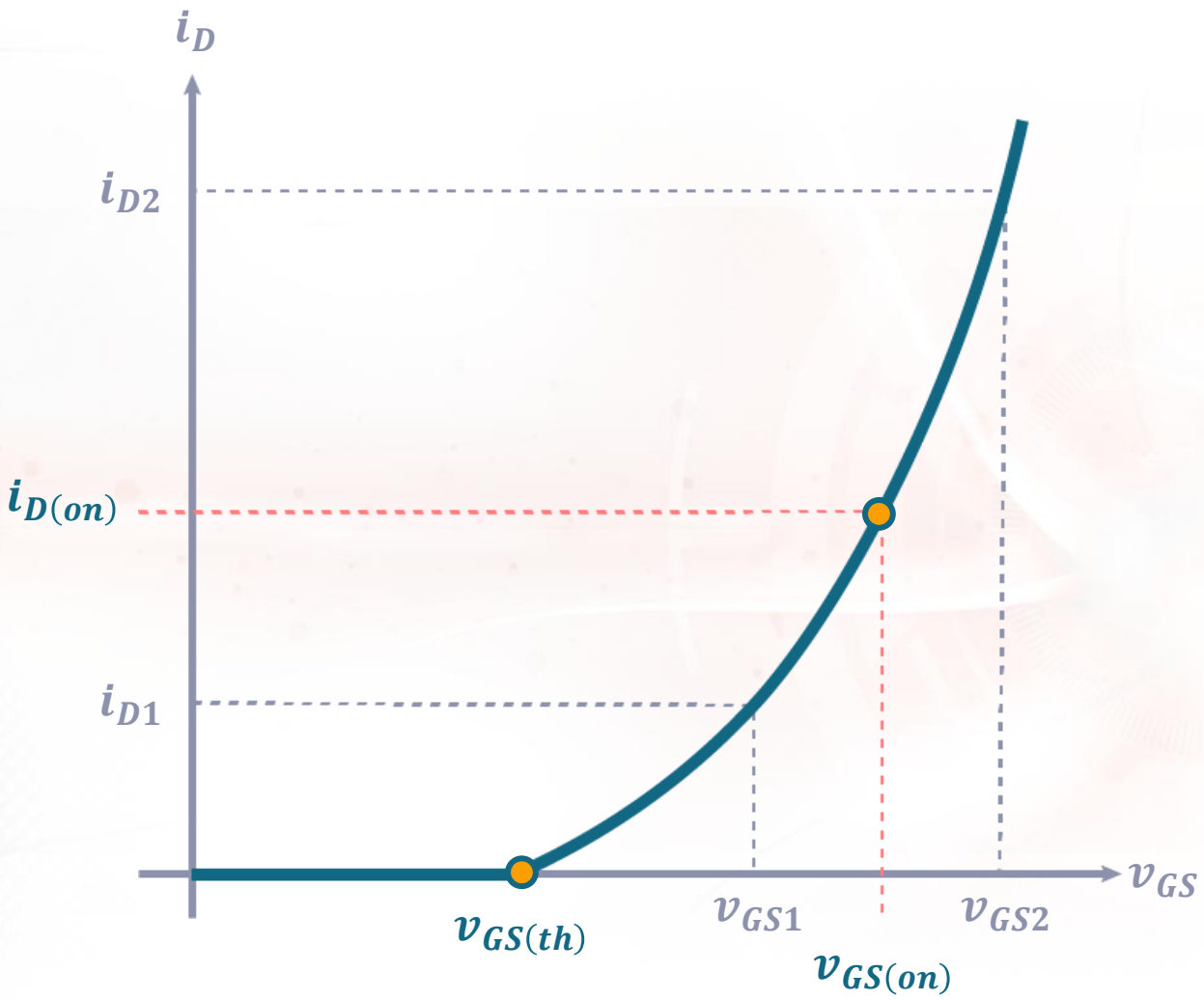

$$i_D = k\left(v_{GS} - v_{GS(TH)}\right)^2$$

$$k = \frac{i_{D(on)}}{\left(v_{GS(on)} - v_{GS(th)}\right)^2}$$

Transfer Characteristics

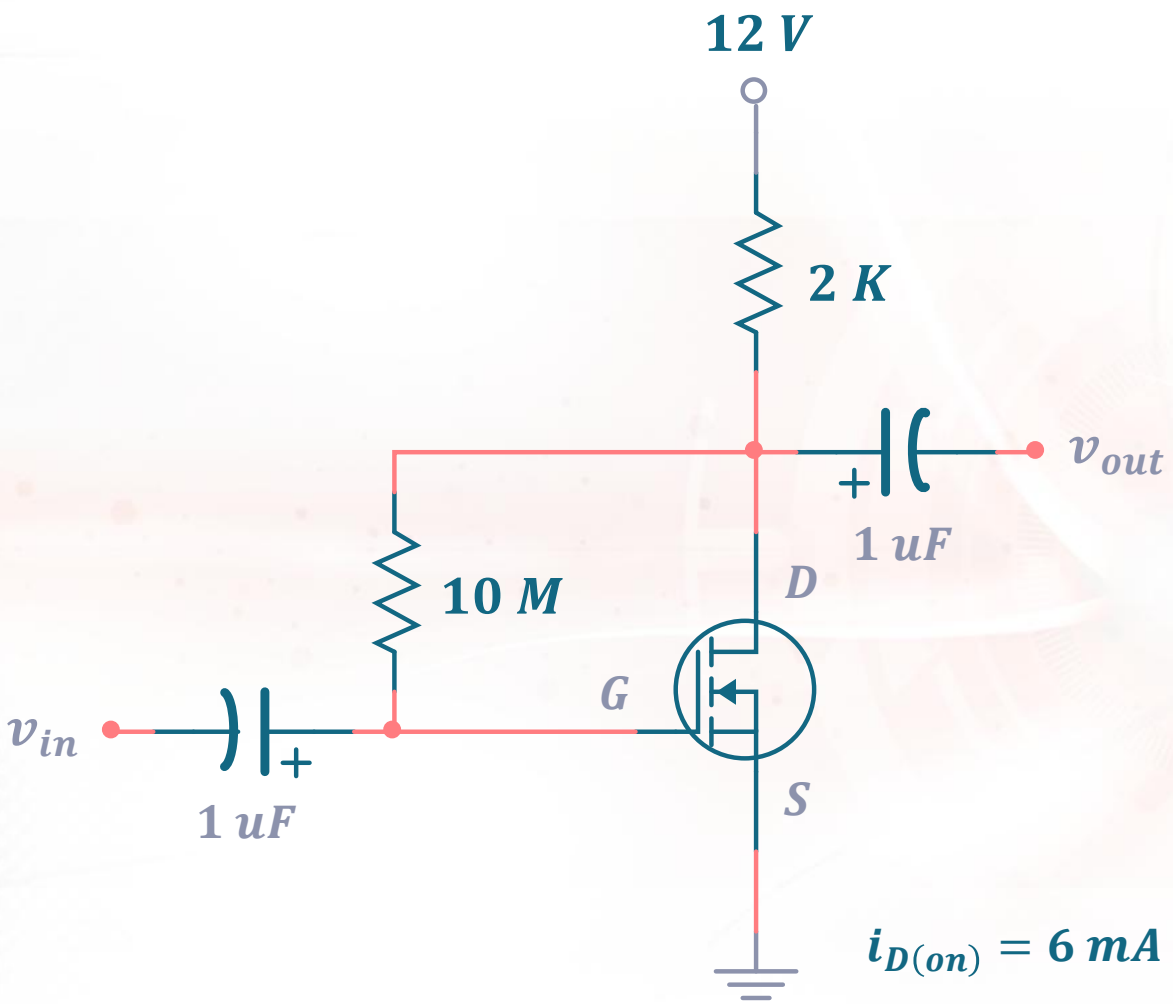

$i_{D(on)} = 6\ mA$

$v_{GS(on)} = 8\ V$

$v_{GS(TH)} = 3\ V$

For the given **drain-feedback** biasing arrangement, determine i_{DQ} and v_{DSQ} for the enhancement-type MOSFET. **Sketch** the transfer characteristics for $v_{GS} = 5\ V$ and $v_{GS} = 10\ V$.

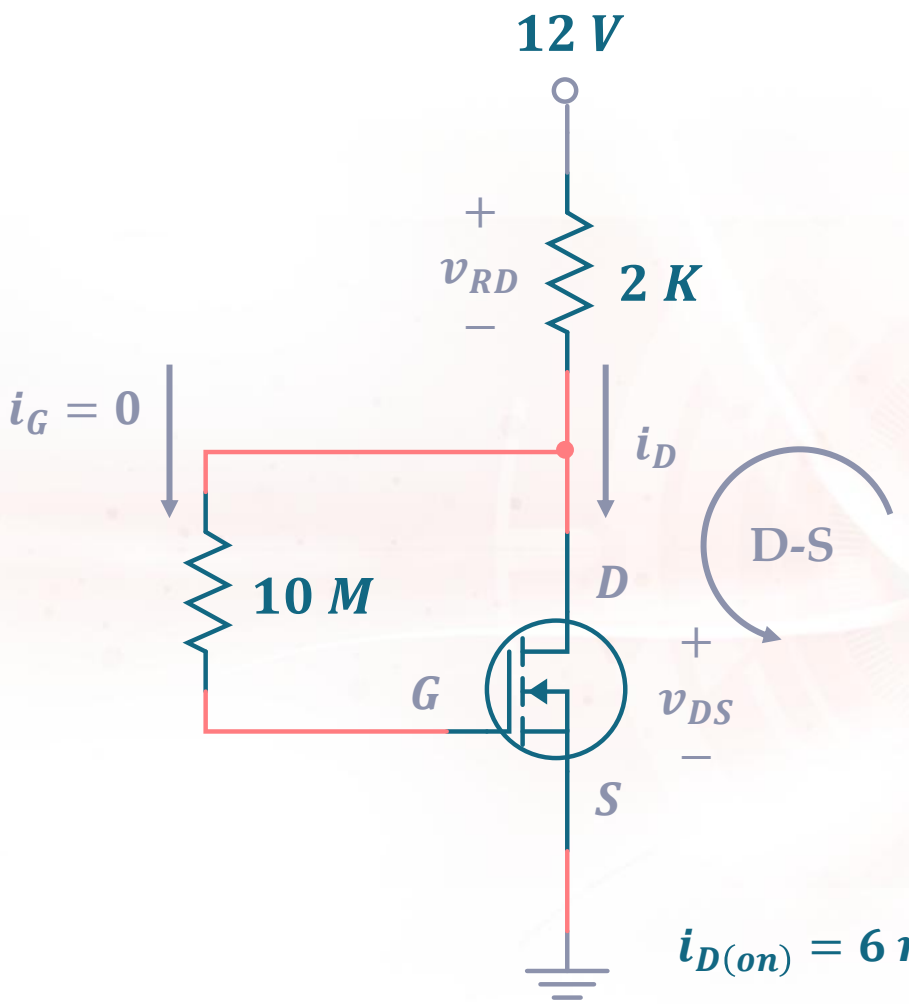

$i_{D(on)} = 6\ mA$

$v_{GS(on)} = 8\ V$

$v_{GS(TH)} = 3\ V$

KVL @ D-S

$$-v_{DD} + v_{RD} + v_{DS} = 0$$

$$v_{DS} = v_{DD} - v_{RD}$$

$$v_{GS} = v_{DD} - i_D R_D$$

$$v_{GS} = v_{DD} - k\left(v_{GS} - v_{GS(th)}\right)^2 R_D$$

$$k = \frac{i_{D(on)}}{\left(v_{GS(on)} - v_{GS(TH)}\right)^2}$$

$$k = \frac{6\ mA}{(8-3)^2}$$

$$k = 240\ \mu A/V^2$$

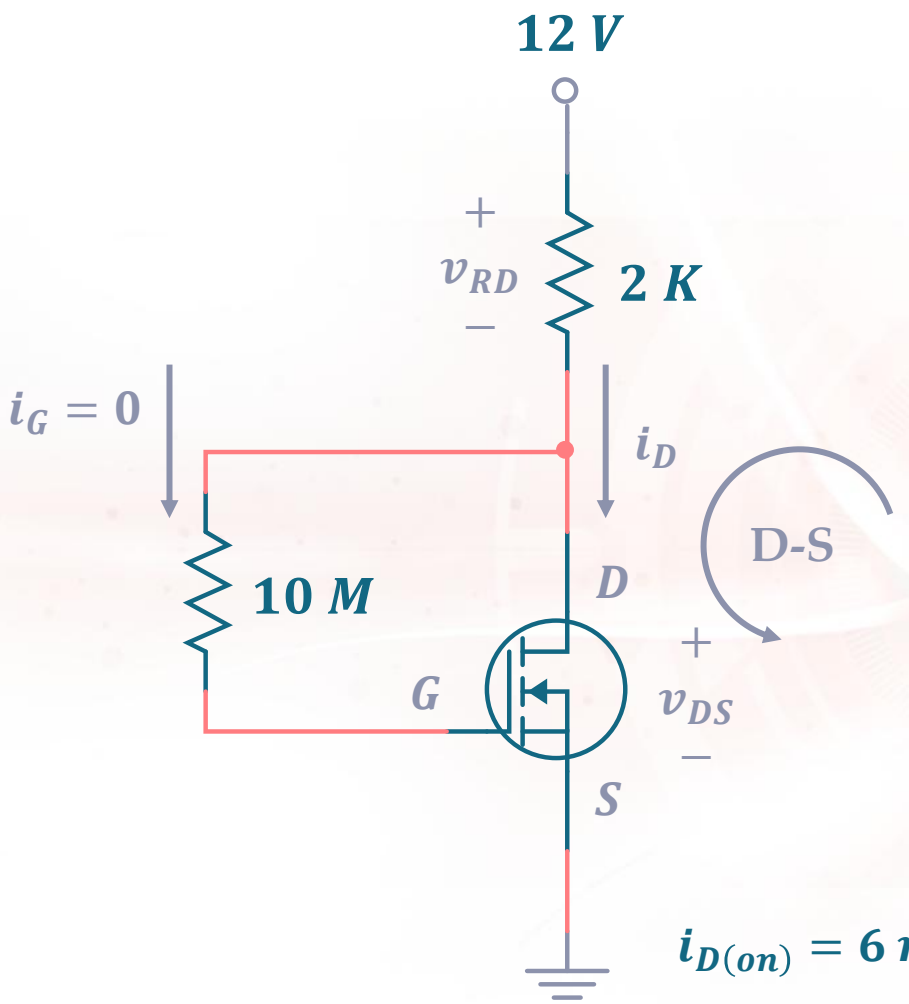

$i_{D(on)} = 6\ mA$

$v_{GS(on)} = 8\ V$

$v_{GS(TH)} = 3\ V$

$k = 240\ \mu$

KVL @ D-S

$$v_{GS} = v_{DD} - k\left(v_{GS} - v_{GS(th)}\right)^2 R_D$$

$$v_{GS} = 12 - 240\ u(v_{GS} - 3)^2(2K)$$

$$v_{GS} = 12 - 0.48\left(v_{GS}^2 - 6v_{GS} + 9\right)$$

$$v_{GS} = 12 - 0.48v_{GS}^2 + 2.88v_{GS} - 4.32$$

$$0 = -0.48v_{GS}^2 + 1.88v_{GS} + 7.68$$

$$\boxed{v_{GSQ} = 6.41\ V}$$

ans

$$v_{GS} = -2.50\ V$$

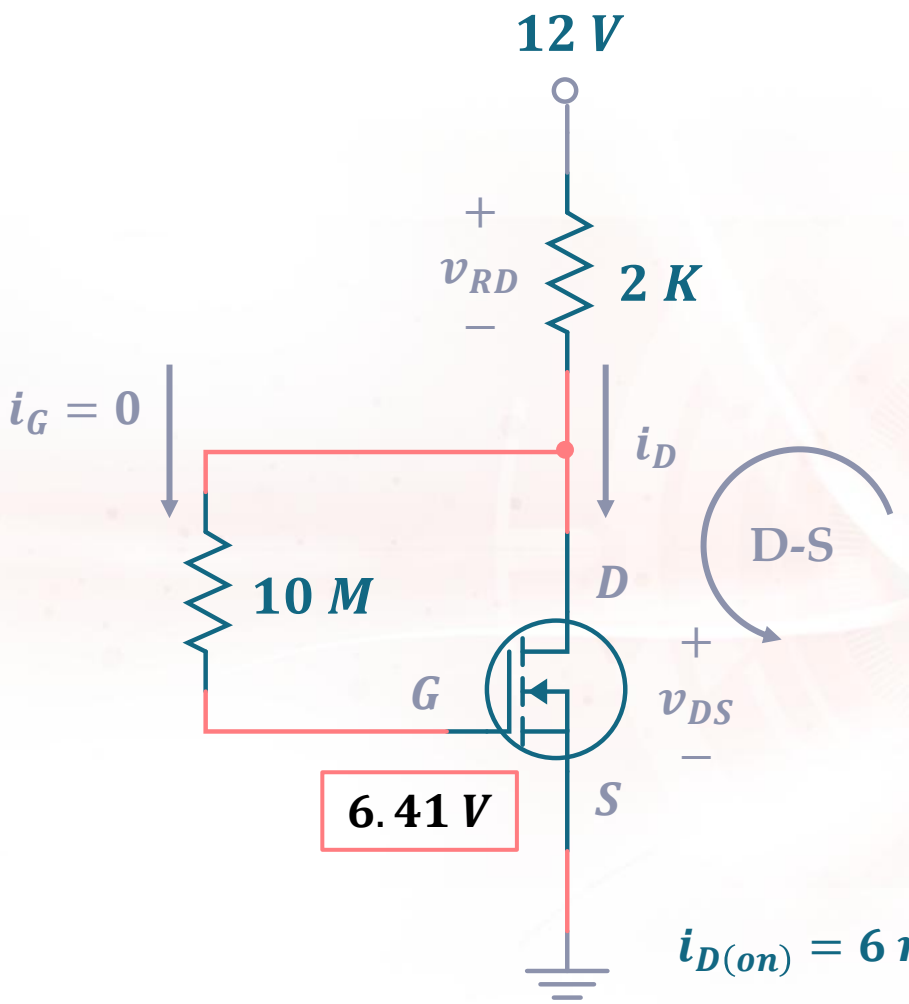

$i_{D(on)} = 6\ mA$

$v_{GS(on)} = 8\ V$

$v_{GS(TH)} = 3\ V$

$k = 240\ \mu$

Drain Current

$$i_D = k\left(v_{GS} - v_{GS(th)}\right)^2$$

$$i_D = 240\ \mu(6.41 - 3)^2$$

$$i_{DQ} = 2.79\ mA$$

ans

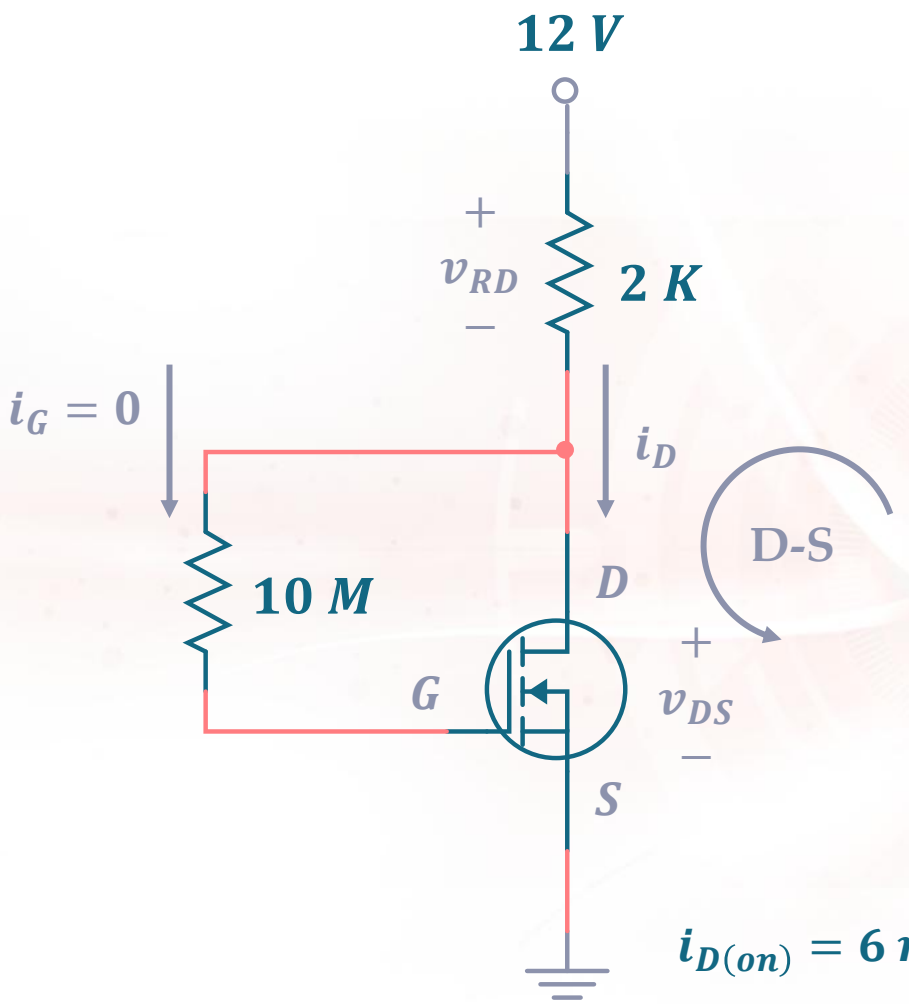

$i_{D(on)} = 6\ mA$

$v_{GS(on)} = 8\ V$

$v_{GS(TH)} = 3\ V$

Transfer Characteristics

$$i_D = k\left(v_{GS} - v_{GS(th)}\right)^2$$

$$i_D = 240\ \mu(5-3)^2\Big|_{v_{GS}=5\ V}$$

$$i_D = 960\ \mu A\Big|_{v_{GS}=5\ V}$$

$$i_D = k\left(v_{GS} - v_{GS(th)}\right)^2$$

$$i_D = 240\ \mu(10-3)^2\Big|_{v_{GS}=10\ V}$$

$$i_D = 11.76\ mA\Big|_{v_{GS}=10\ V}$$

TRANSFER CHARACTERISTICS

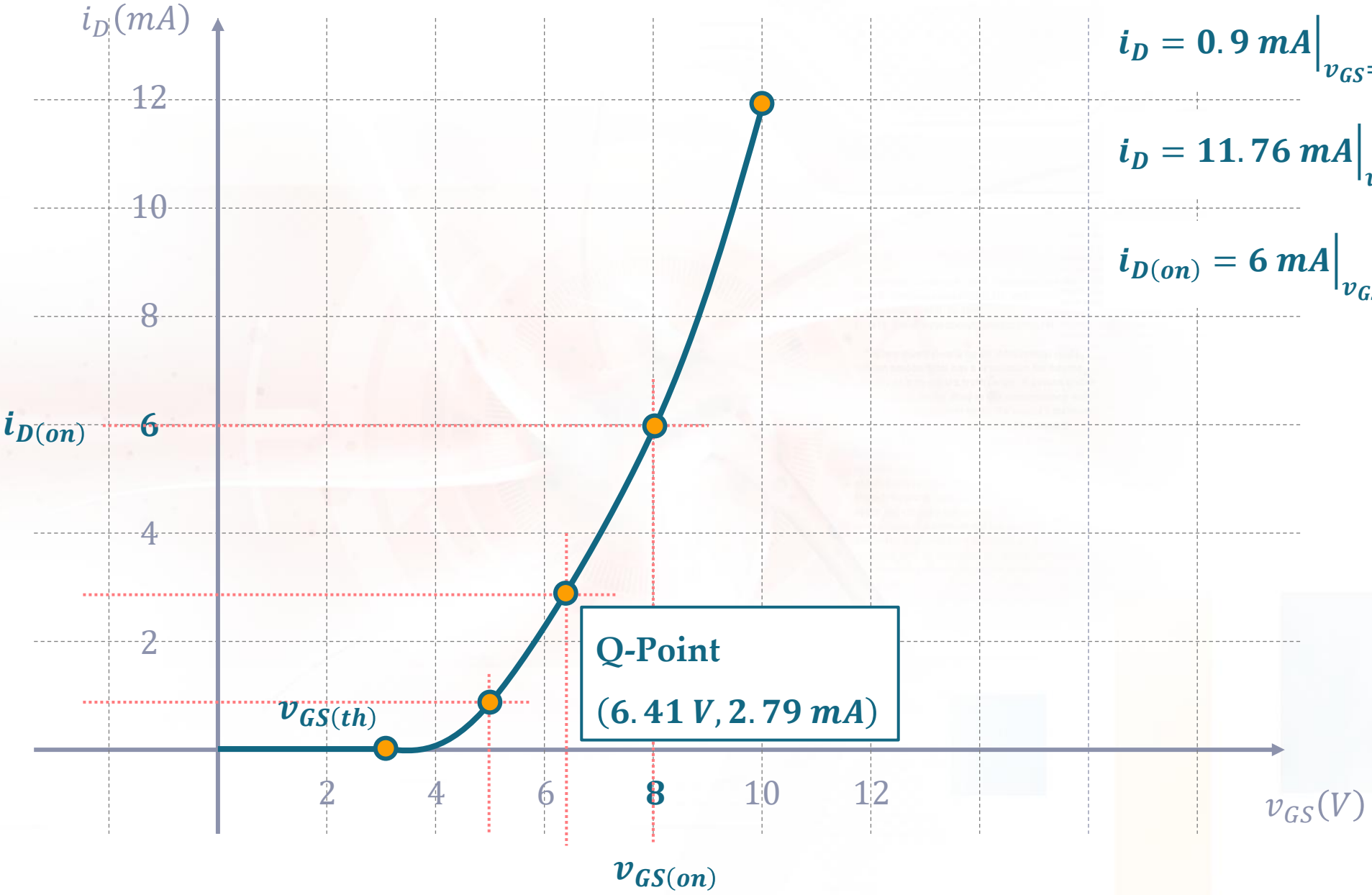

$$i_D = 0.9\ mA\Big|_{v_{GS}=5\ V}$$

$$i_D = 11.76\ mA\Big|_{v_{GS}=10\ V}$$

$$i_{D(on)} = 6\ mA\Big|_{v_{GS}=8\ V}$$

LABORATORY